# 0F3SR070A04A000
# FOH-D190

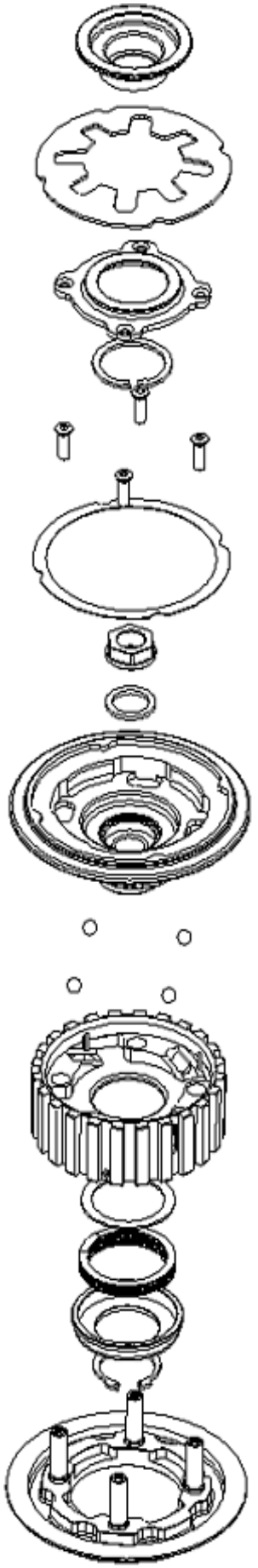

**0F3SR070A040004**
Bearing support

**0S1A90/120**
Primary spring

**0F3SR070A040008**
Spring pusher plate

**901SEAV32**
Seeger

**0F3SR070A040018**
Screws

**0F7SR230J020015**
Spring support

**0F3SR070A040013**
Nut M14 x 1

**0F3SR070A04S017**
Self loching main washer

**0F3SR070A04A01A**
Hub

**001 MG 025**
**Balls**

**0F3SR070A04002A**
Drum

**0F3SR070A040045**
Spacer

**0S2044/ 40**
Secondary spring

**0F3SR070A04A007**
Drum stopper

**901SEA31**
Seeger AV30

**0F3SR070A040003**
Pusher plate

# PITBIKE DAYTONA 190
# SLIPPER CLUTCH

## INSTALLATION INSTRUCTIONS

The slipper system group, made up of:
-Hub (0F3SR070A04A01A);
-Balls (001MG025);
-Drum (0F3SR070A04002A);
-Secondary spring (0S2044/ 40);
-Drum stopper (0F3SR070A04A007);
-Seeger (901SEA31)
-Spacer (0F3SR070A040045)
Is supplied as already assembled (see Fig.1).
If necessary, to disassemble and check the ramps, simply extract the seeger (901SEA31), taking care to keep the drum stopper (0F3SR070A04A007) as the seeger keeps the secondary spring preloaded (0S2044 / 40).
Install the plates of the original clutch on the slipper system group, keeping the same sequence and face orientation of each plate. Total height of the plates kit must be 25.5mm ± 0.2mm.
Align the teeth of the conductor discs so that they can subsequently be inserted into their seats on the original bell. Place the pusher plate (0F3SR070A040003) on the disc pack.
Check the presence of the original spacer between the bell and the hub, then insert the assembly on the primary shaft, making sure to simultaneously match the toothing of the shaft with that of the hub and the teeth of the conductor discs with the toothing of the bell.
The preload group, made up of:
-Bearing support (0F3SR070A040004)
-Spring pusher plate (0F3SR070A040008)
-Primary spring (0S1A90)
-Seeger (901SEAV32)
Is supplied as already assembled (see Fig.2).
If necessary, for disassembly it is sufficient to extract the seeger (901SEAV32).
Insert the original bearing into the bearing support (0F3SR070A040004)
Check that the primary spring support (0F7SR2305020015) is correctly inserted in the seat on the hub (0F3SR070A04A01A)
Position the preload assembly on the hub (0F3SR070A04A01A) checking the correct insertion of the primary spring (0S1A90) in the appropriate seats (see Fig 3).
Fix the preload assembly using the four screws, after aligning the holes in the spring pusher plate (0F3SR070A040008) with the studs on the pusher plate (0F3SR070A040003)

**When assembly is complete, refit the cover clutch, checking correct operation, if necessary adjust the lever or the transmission rod on the cover. In case of frequent disassembly, check the correct tightening of the bolts on the pressure plate.**

### GENERAL SAFETY REGULATIONS

-IN THIS SHEET ARE REPORTED THE DIRECTIONS TO PERFORM CORRECTLY THE CLUTCH ASSEMBLY OPERATIONS
-STM RESERVES THE RIGHT, WITHOUT NOTICE, TO INTRODUCE ANY TECHNICAL CHANGE WHENEVER DEEMED IT TO BE NECESSARY TO IMPROVE FUNCTION AND QUALITY OF THE PRODUCTS.
**-STM ITALY SRL PRODUCTS ARE EXCLUSIVELY INTENDED FOR COMPETITION, NOT SUITABLE ON MOTORBYKES ON PUBLIC ROADS.**
-ASSEMBLY OPERATIONS MUST BE PERFORMED BY A SKILLED TECHNICIAN AND MUST BE SCRUPULOUSLY OBSERVED.
-BEFORE MOUNTING THE CLUTCH MAKE A COMPLETE INSPECTION OF THE MOTORBIKE COMPONENTS, IN ORDER TO VERIFY THE POSSIBLE PRESENCE OF FAULTS OR ANOMALIES ON THE VEHICLE.
-MAKE SURE THAT THERE ARE NO MISSING/DAMAGED PARTS IN THE CLUTCH KIT.
-SOME PARTS OF THE CLUTCH AND ITS COMPONENTS CAN HAVE SHARP SURFACE: HANDLE WITH CARE.
-SOME COMPONENTS OF THE CLUTCH, BECAUSE OF THEIR SMALL DIMENSIONS CAN BE SWALLOWED: KEEP AWAY FROM CHILDREN.

### RULES FOR PRODUCT CARE AND CLEANING

**ANODIZED and/or LEXAN PARTS**: DO NOT USE on both glossy and matt anodized parts or on lexan components any type of acid or alkaline based degreaser. Use only neutral-based soaps.
**We recommend** using a soft, non-abrasive, damp and clean microfiber cloth or synthetic sponge to avoid abrasions and scratches on surfaces.
However, the use of detergents containing alcohol or aggressive chemical products, but also pickling agents or acids is **prohibited**.
Always wash your motorcycle cold, never hot.
**Do not use** pressure washers, steam cleaning machines or any type of high pressure washing system or with high operating temperatures, any type of washing of these types can damage or permanently ruin the anodized surfaces or lexan.

**STM ITALY**
**Via A. Olivetti 15 - 10020 - Riva presso Chieri (TO)**
**www.stmitaly.com - contact@stmitaly.com**

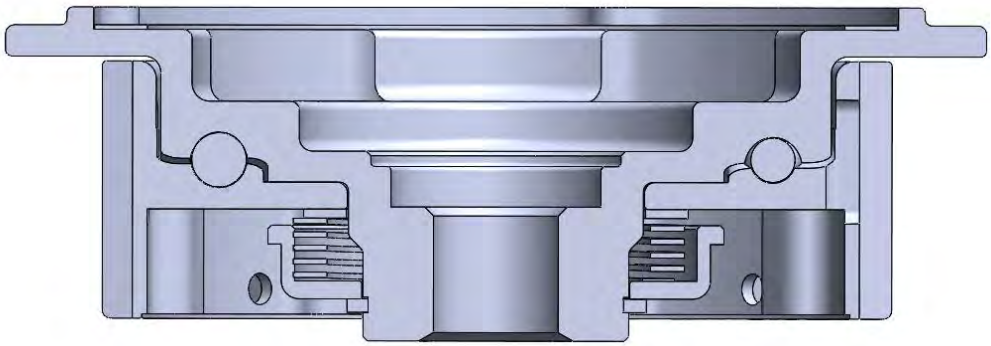

Fig. 1

Fig. 2

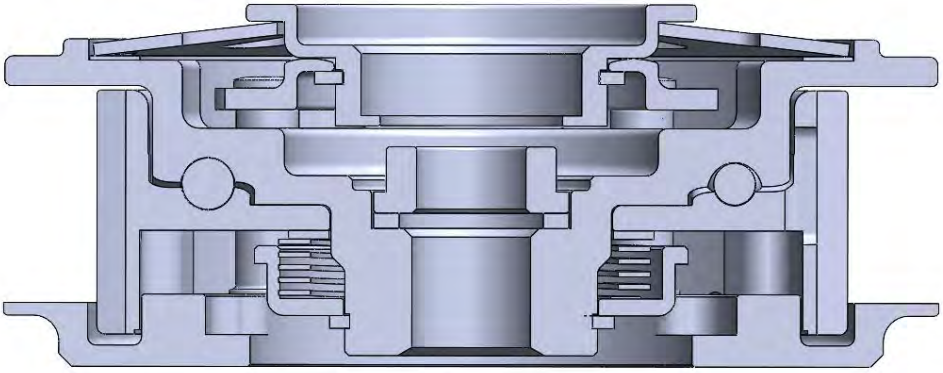

Fig, 3